AE Series
Outdoor Housing

Installation Guide

Ordering part no.:

AE-238	900041101G
AE-239	900041201G
AE-243	900041901G
AE-244	900042401G
AE-23A	900042301G
AE-23B	900042200G
AE-23C	900041700G
AE-23D	900041800G
AE-23E	900041601G
AE-23F	900042100G

Rev. 1.1

UNPACKING:
Unpack carefully. Electronic components can be damaged if improperly handled or dropped. If an item appears damaged in shipment, place it properly in its carton and notify the shipper.

IMPORTANT!:

1. Read and follow Instructions: All operating and user instructions should be read and followed before the unit is to be operated.
2. Electrical Connections: Only a qualified electrician is allowed to make electrical connections.

I Specifications

Model Number	AE-238, AE-243	AE-23A, AE-23B, AE-23C, AE-23D	AE-239, AE-244	AE-23E, AE-23F
Power Input	24V AC/ DC	24V AC/ DC	PoE: 50~57V DC	PoE: 30/60/95W, 50~57V DC
Max. Output power budget	30W	80W, 100W (-AIW)	30W	25W - 30W PoE PSE 48W - 60W PoE PSE 72W - 95W PoE PSE
Power Consumption	Window heater: 10W; Blower: 2W; Camera: 6 ~ 8W	Window heater: 10W; Blower: 2W; Camera: 6 ~ 8W; Cold start heater: 30W	Window heater: 5W; Blower: 2W; Camera: 6 ~ 8W; IR: 6W	Window heater: 10W; Blower: 2W; Camera: 6 ~ 8W; Wiper: 6W
Environmental Operation Temp.	-20°C ~ +65°C (-4°F ~ +149°F)	-20°C ~ +65°C -20°C ~ +50°C (w/ IR) -40°C (Cold start)	-20°C ~ +65°C -20°C ~ +50°C (w/ IR)	-20°C ~ +65°C -20°C ~ +50°C (w/ IR)
Window heater ON/OFF	≤ 30°C (86°F) ON; ≥ 35°C (95°F) OFF	≤ 30°C (86°F) ON; ≥ 35°C (95°F) OFF	≤ 30°C (86°F) ON; ≥ 35°C (95°F) OFF	≤ 30°C (86°F) ON; ≥ 35°C (95°F) OFF
Blower Control	≥40°C (104°F) ON; ≤ 35°C (95°F) OFF	≥40°C (104°F) ON; ≤ 35°C (95°F) OFF	≥40°C (104°F) ON; ≤ 35°C (95°F) OFF	≥40°C (104°F) ON; ≤ 35°C (95°F) OFF
Protection Level	IP67, IK10	IP67, IK10 (IP66 w/ wiper)	IP67, IK10	IP67, IK10 (IP66 w/ wiper)
Construction	Die-cast Aluminum Alloy	Die-cast Aluminum Alloy	Die-cast Aluminum Alloy	Die-cast Aluminum Alloy
Coating	White epoxy powder coating	White epoxy powder coating	White epoxy powder coating	White epoxy powder coating
Dimensions	415 (L) x 170 (W) x 125 (H) mm	502.8 (L) x 170 (W) x 135.5 (H) mm	415 (L) x 170 (W) x 125 (H) mm - IR not included	502.8 (L) x 170 (W) x 135.5 (H) mm - IR not included
Net Weight	2,2kg (4.84 lb)	2,7kg (5.95 lb), 2,8kg (6.18 lb - wiper model)	2,2kg (4.85 lb)	2,7kg (5.95 lb), 2,8kg (6.18 lb - wiper model)

If you plan to install this camera enclosure into a tropical, sea coastal, or an environment where salt water or corrosive industrial waste water/moist are present, please seal each stainless steel screws and fittings with a silicon grease compounds. This will help prevent electrolysis to occur and extend the life span of the camera and housing.

Revision History:
Rev. 1.0: Initial release.
Rev. 1.1: Added the Accessory list and updated environmental parameters: Added the distribution board drawing for the AE-23E and -23F.
Rev. 1.2: revise specification and update part number; update IR LED distance and remove AM-11E ; update IR Control figures

Package Contents:

1. T30 L wrench.
2. 2x M4x8
3. Truss head screw: 1x 1/4"-20X1/4"
4. Truss head screw: 1x 1/4"-20X3/8"
5. 1x Plastic buffer plate:

IMPORTANT:

1. Disconnect devices: A readily accessible disconnect device in the building installation wiring should be incorporated.
2. Electrical Connection: Only a qualified electrician is allowed to make electrical connections.

II Mounting Configuration & Dimensions

Swivel Positions and Directions

AE-238, AE-239

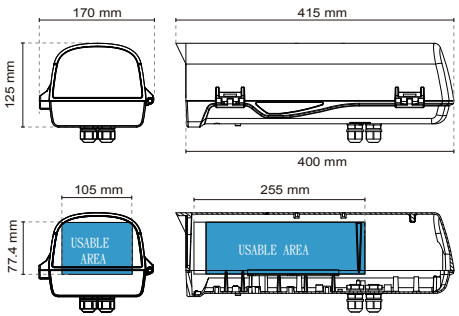

AE-243, AE-244

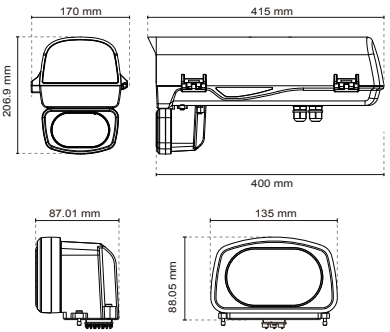

AE-23A, 23B, 23C, 23D, 23E, 23F

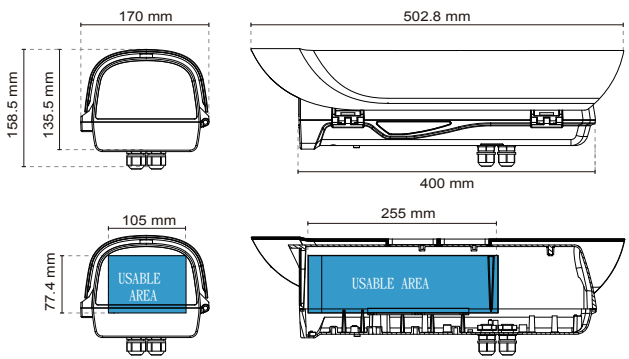

Dimensions with the IR unit and wiper

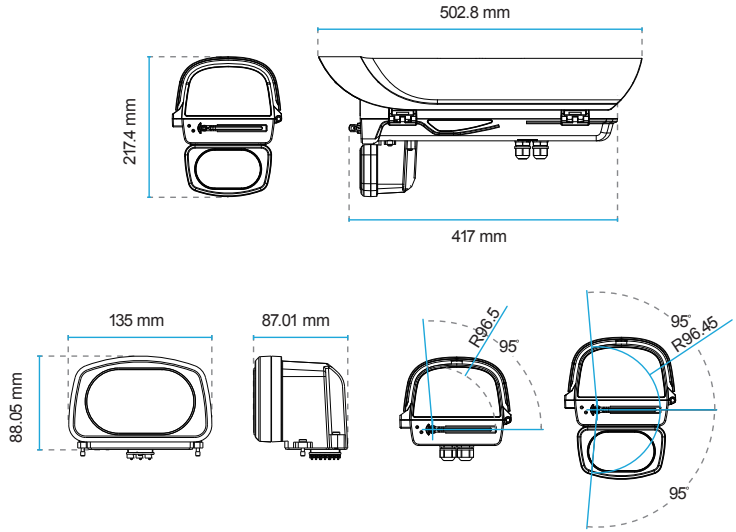

III Component Description

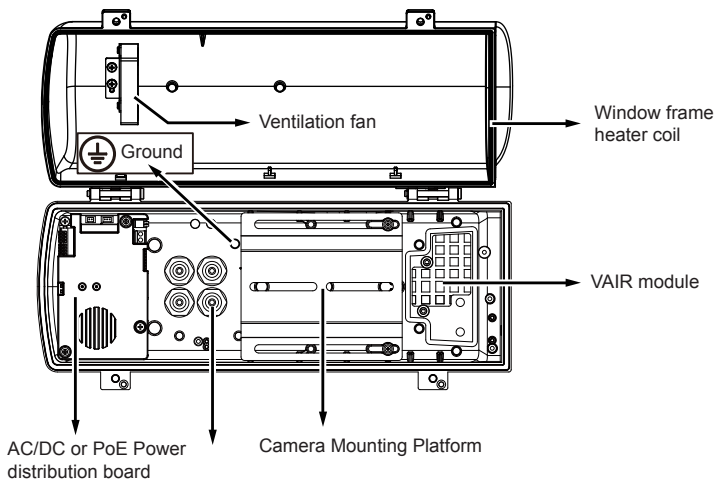

IV Installation Suggestions

⚠ WARNING:

- When installing a housing that comes with an IR illuminator:

  Please avoid eye exposure or apply appropriate protection, such as wearing a pair of Infrared protection glasses, when working with the product. Always use camera live view to oberve IR lighting effects.

V Installation

1. Prepare power wires, a ground wire, and a CAT5e Ethernet cable. Pass them through the M16 waterproof connectors and its waterproof components.

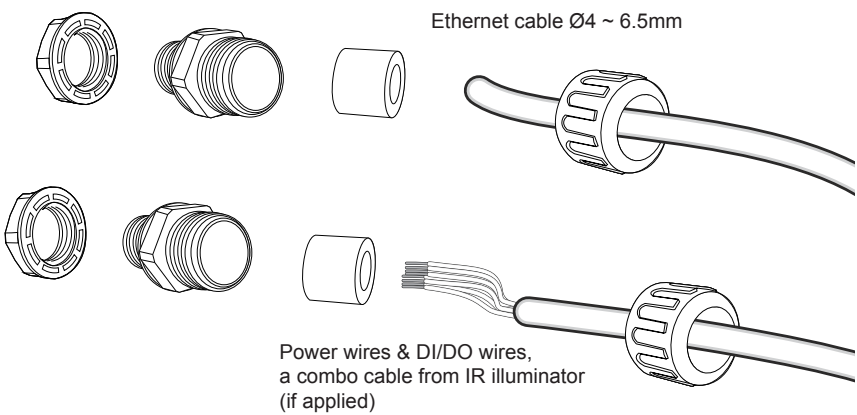

Note that some cables are connected when shipped. You do not need to connect heater, blower, and the front IR powere wires.

You may need to remove the RJ45 connector, and use a crimping tool to connect the Ethernet wires to an RJ45 connector inside the enclosure. Use an Ethernet cable of the width of 5 ~ 6.5mm.

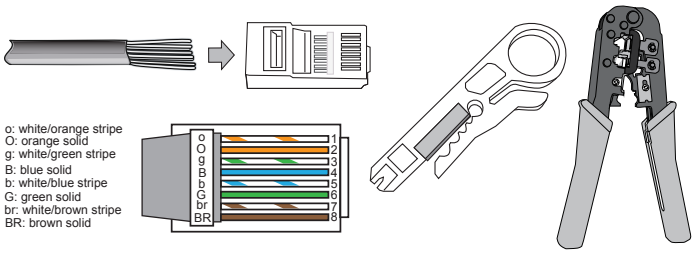

2. When done, tighten up and install the waterproof connectors.

3. Assemble the camera components, e.g., the CS ring and lens module. Secure the mounting plate to the bottom of the camera (the label side) using the included screw.

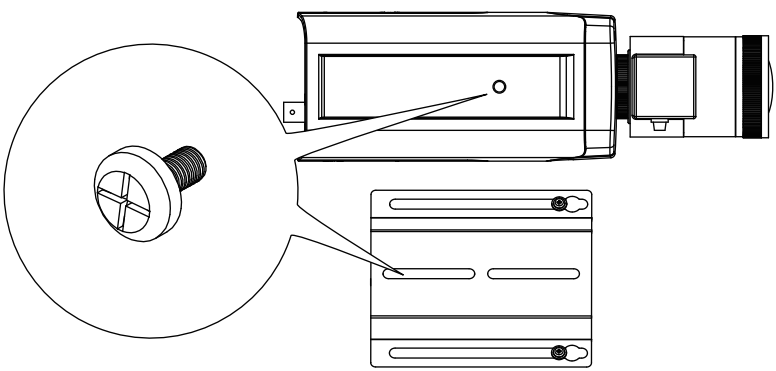

Intrusion Alarm - Available on AE-23A/B/C/D/E/F.

If preferred, install the intrusion alarm switch to the side of enclosure, and connect the detection wires to camera DI.

4. Adjust the camera's position so that the lens module can flush align with the tempered glass. Secure the camera using the screws and washers to the bottom of the housing.

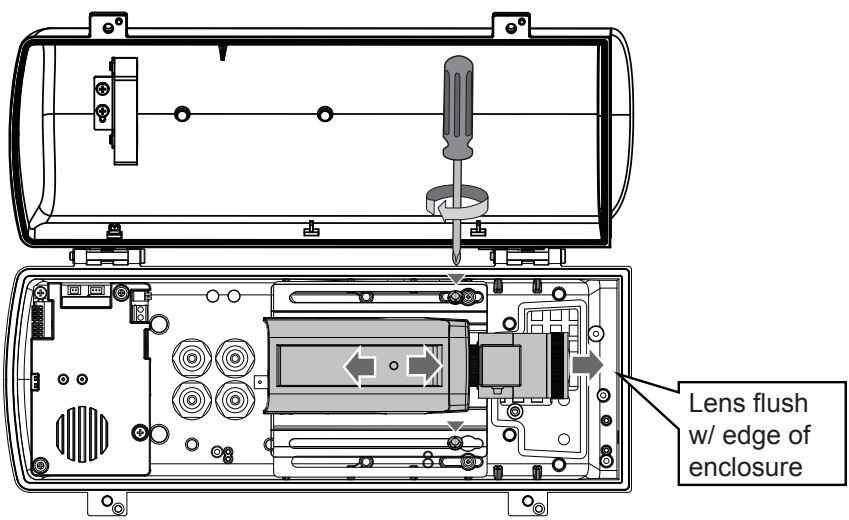

5. Connect 24V power source to the power input terminal. Connect power wires from the DC 12V output to the camera. You may also connect the 24V power to drive an external IRs.

Below is the distribution board drawing power from 24V AC/DC.

AE-23A, AE-23B, AE-23C, AE-23D

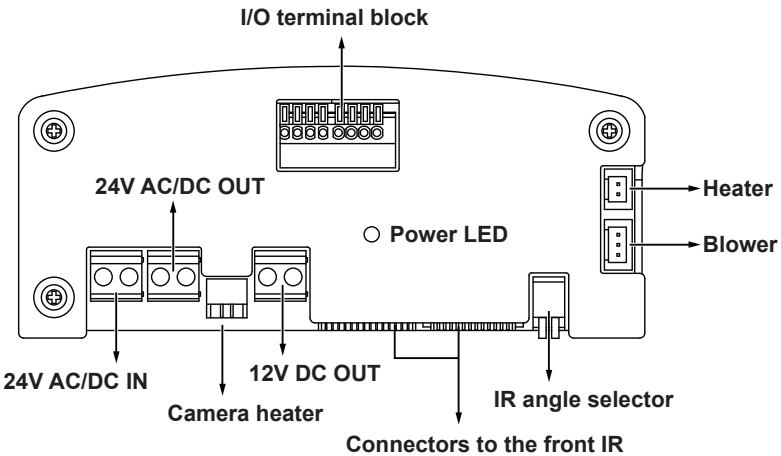

AE-238, AE-243

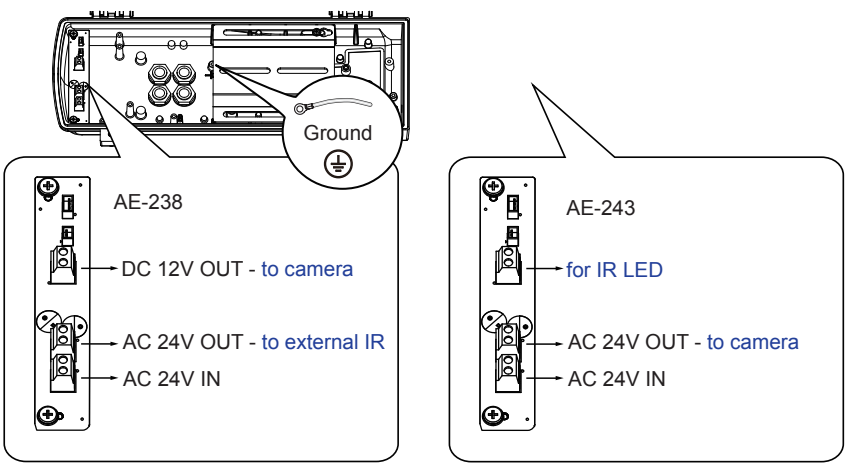

AE-23E, AE-23F

Below is the distribution board (AE-23E, -23F) that draws power from a 30/60/95W PoE PSE.

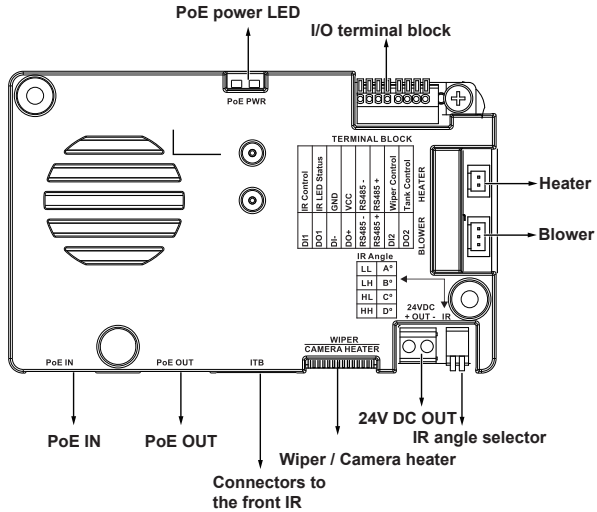

AE-239, AE-244

Below is the distribution board (AE-239, -244) that draws power from a 30/60/95W PoE PSE. Note that the AE-239 and AE-244 provide 12V DC output.

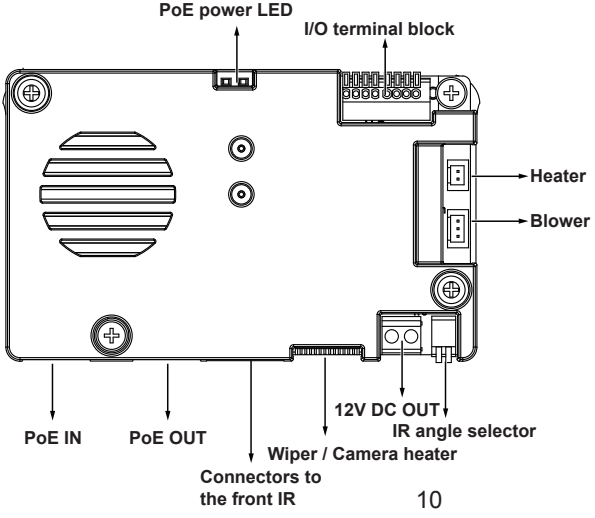

Below is the pinouts for the DI/DO terminal block for 23A/23B/23C/23D/23E/23F

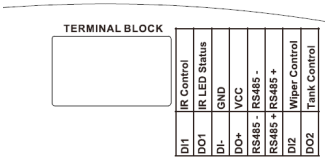

Facing the rear side of the housing, from left to right:

DO2	Tank water pump control
DI2	Wiper control, connects to IP camera's DO for manually triggering washer.
RS485+	RS485+, RS485 can be used to control IR illuminator beam angles, etc.
RS485-	RS485-
DO+	+5V VCC
DI-	GND
DO1	IR LED status, connects to IP camera's DI for IR status
DI1	IR control, synchronizes day/night mode switching for IP camera. It is related to IR cut filter.

The AE-239/244 does not support external washer kit.

RS485+	RS485+, RS485 can be used to control IR illuminator beam angles, etc.
RS485-	RS485-
DO+	+5V VCC
DI-	GND
DO1	IR LED status, connects to IP camera's DI for IR status
DI1	IR control

Configuring IR illuminator

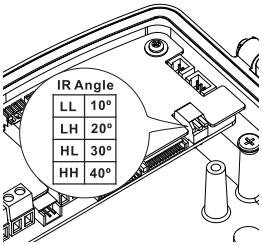

The following enclosures comes with adjustable IR lights: AE-23A/23B/23C/23D/23E/23F

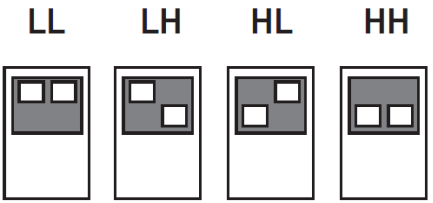

Below are the parameters of the IR illuminator. Use the onboard jumpers to configure the beam angle for different effective illumination range.

VAIR	48W				24W				12W			
no. of LEDs	18P/Dual				18P/36mil Single				18P/ 30mil Single			
Beam angle	10°	20°	25°	30°	10°	20°	25°	30°	10°	20°	25°	30°
Distance (meter)	350m	280m	210m	150m	200m	155m	115m	70m	140m	110m	80m	50m

VAIR	6W			
no. of LEDs	4P/42mil Single			
Beam angle	10°	20°	30°	40°
Distance (meter)	100m	80m	60m	40m

6. Connection for IR control by IR light sensor, RS485 commands and camera digital output

1. IR control by IR light sensor

The day/night mode DI connection enables the synchronization of IR light sensor and then automated day/night switching mechanism on the camera.

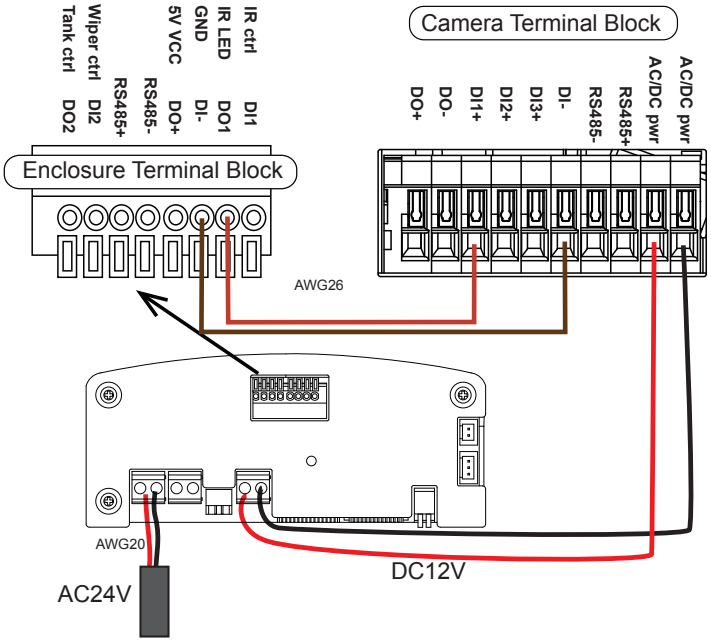

2. IR control by RS485 command

Allow user to configure the RS485 command via camera web UI to cotrol IR on/off.

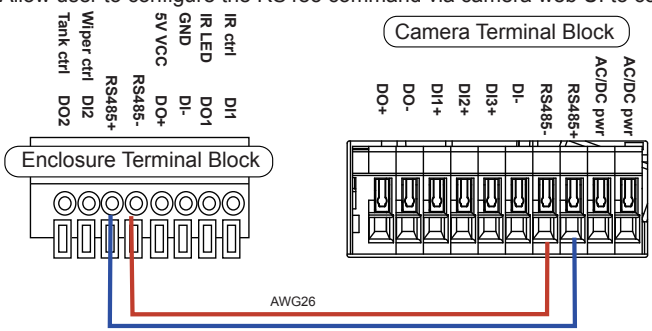

Note the wire gauge requirements for making the power connections. (24VAC 24W load)

Wire Gauge	22	20	18	16	14	12
Distance	55	90	150	230	270	600 feet

2. IR control by Camera DO
Camera will automatically trigger IR light on/off via DO.

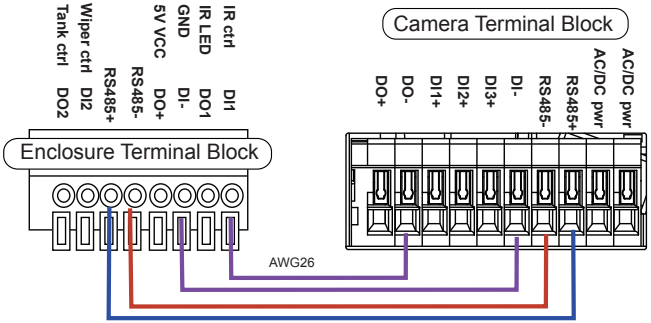

Below is a diagram for water tank and wiper control. The wiper can be started by manually triggering the Digital Output from the camera user interface.

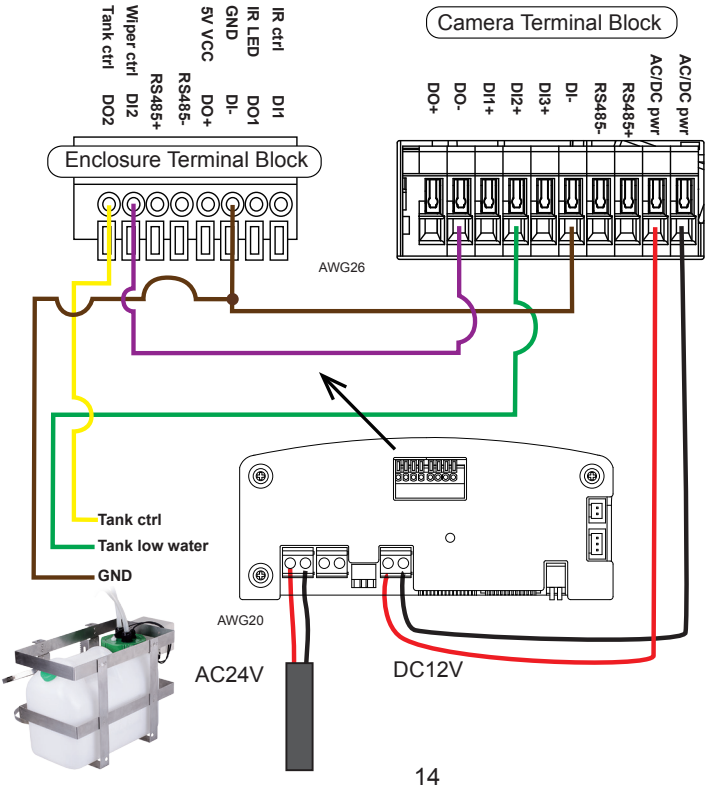

7. If using the AM-21E wall-mount bracket, secure the intersection bracket to the bottom of the housing by driving two screws.

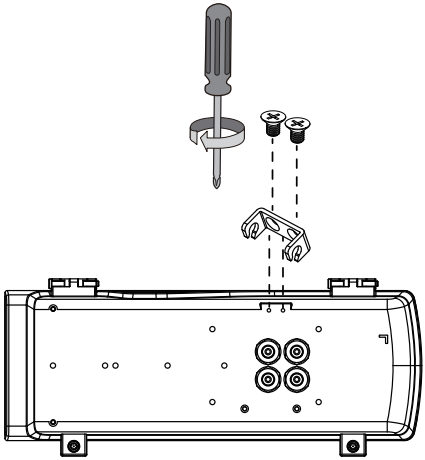

Below are the mounting hole dimensions for the mounting brackets. Chances are you may need to plan for the locations of the brackets.

AM-21D

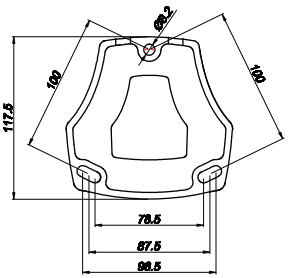

AM-811

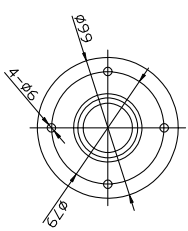

AM-11F

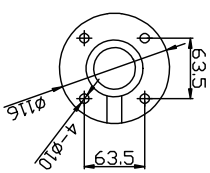

AM-21E

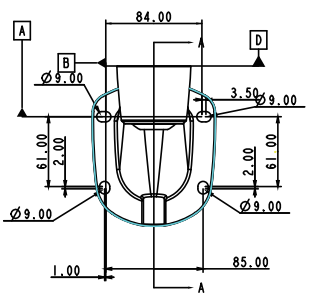

8. Install the housing to the wall-mount bracket by aiming and pressing the spring mortise, and hook the bracket onto the groove in the spring mortise.

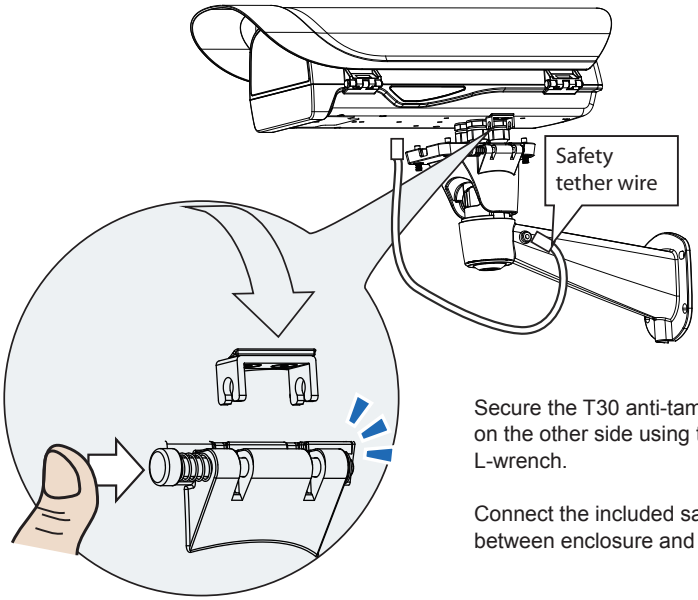

Secure the T30 anti-tamper screws on the other side using the included L-wrench.

Connect the included safety wire between enclosure and bracket.

If using other mount brackets, use the included M6 screws to secure the housing to the bracket. Use the mounting holes indicated below.

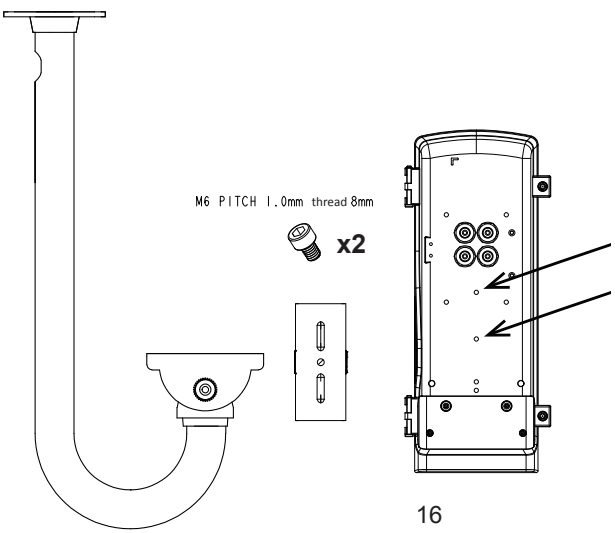

The AM-21D wall-mount, AM-11F, and AM-811 pendant brackets use the two mounting holes as indicated below.

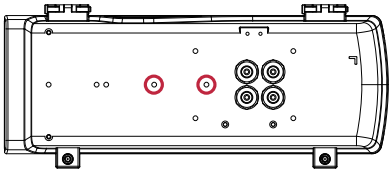

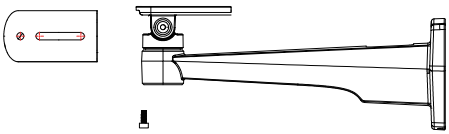

AM-21D

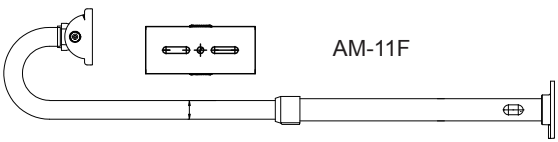

AM-11F

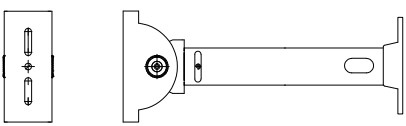

AM-811

Another two mounting holes in the front can be used use an IR bracket, AM-219. The bracket can be used to install external IRs.

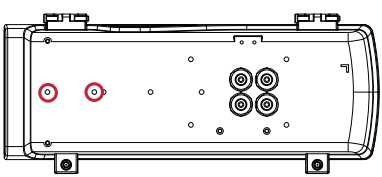

AM-219

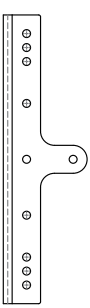

If external IRs are installed, you can contact VIVOTEK for a different type of waterproof connectors for the 1/2" conduits. You can then route two of the conduits through the opening in the front of the bracket to the corresponding connectors on the IR illuminators. The 24V power wires to the IR illuminators are contained within.

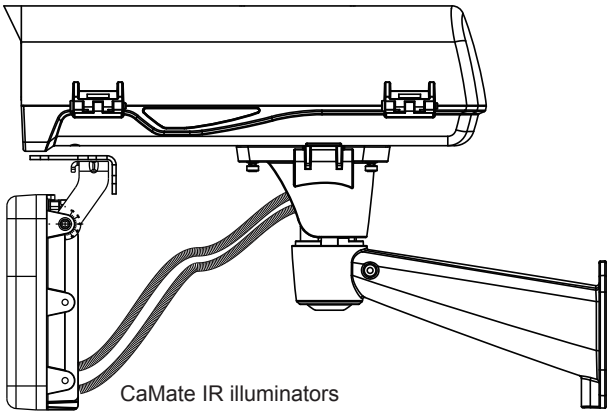

CaMate IR illuminators

9. Adjust zoom and focus and open a web console with the camera to tune for the best image. When zoom and focus is done, Close the top cover and fasten the top cover screws.

The housing can also be installed using the pole-mount or corner-mount options along with a power box (AA-351, AA-352), outdoor PoE switch, or junction box.

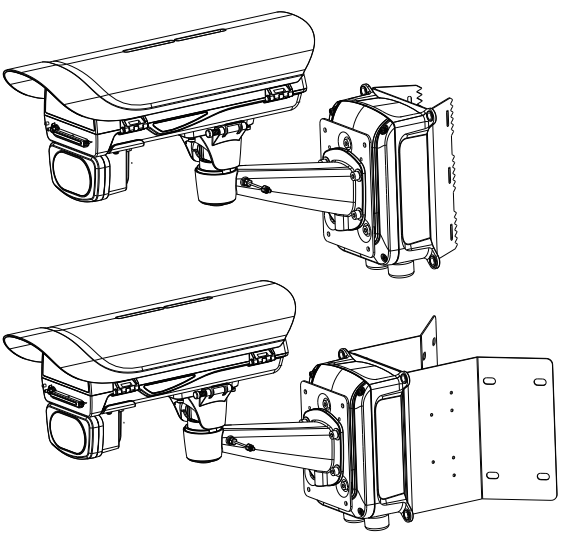

Use the included M10 hex socket screws to secure the power box to a pole-mount or corner mount bracket.

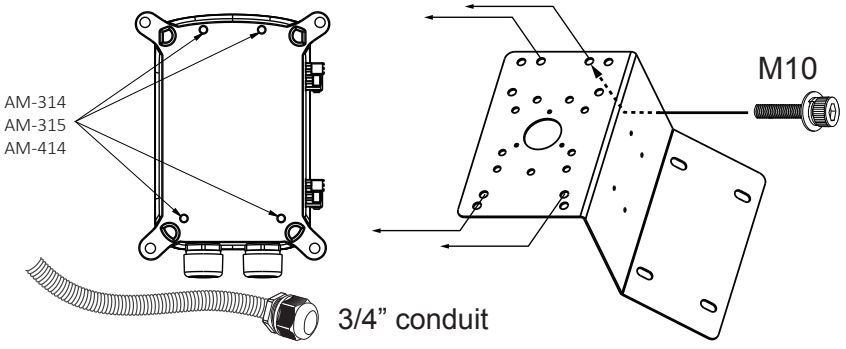

The mounting hole definition is illustrated below. The same mounting hole pattern apply to all pole-mount and corner-mount brackets.

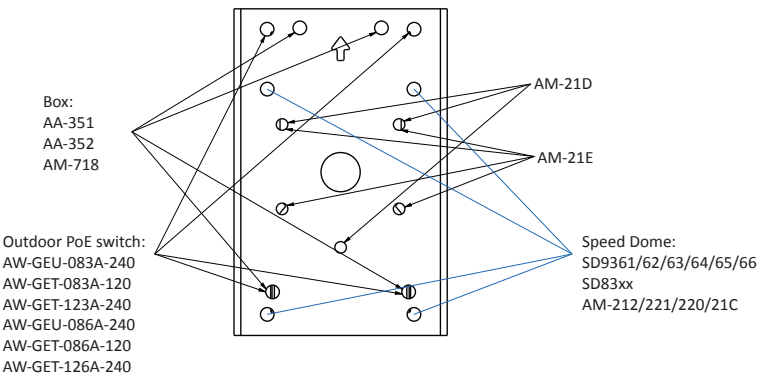

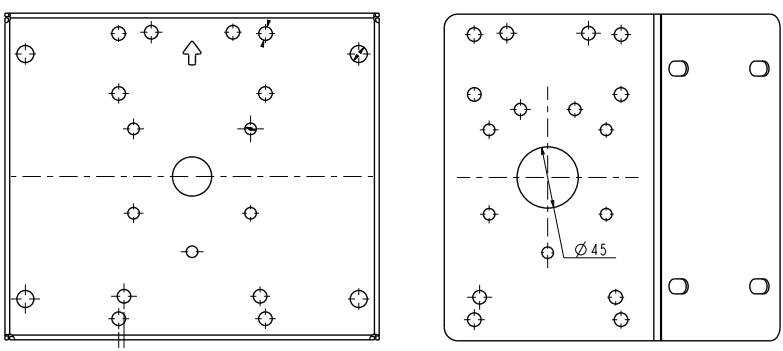

If a power box or outdoor PoE switch is applied, Use the following mounting positions for the camera housings (via AM-21D and AM-21E).

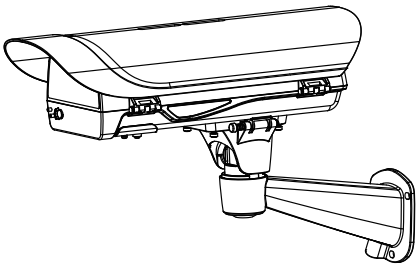

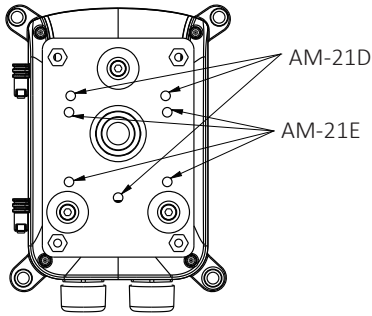

10. If an IR illuminator is preferred, remove the metal cover from underneath the housing. Install the IR unit (AI-106, -108, -109) by fastening 4 T30 anti-tamper screws. Note that the bubber gasket should be in place when you install the unit.

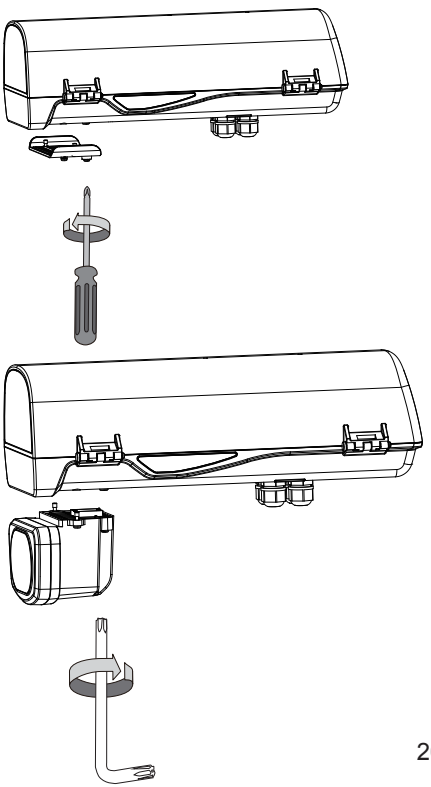

11. Firmware configurable options:

Open a web console with the camera.

Use the Media > Focus function to tune for a best image focus on your target area.

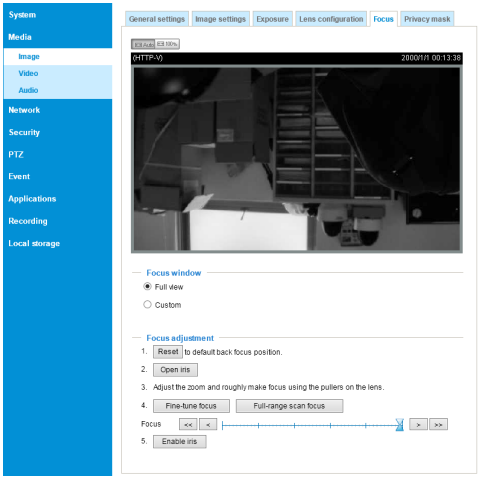

If preferred, e.g., shooting fast moving vehicles, select the 60fps frame rate.

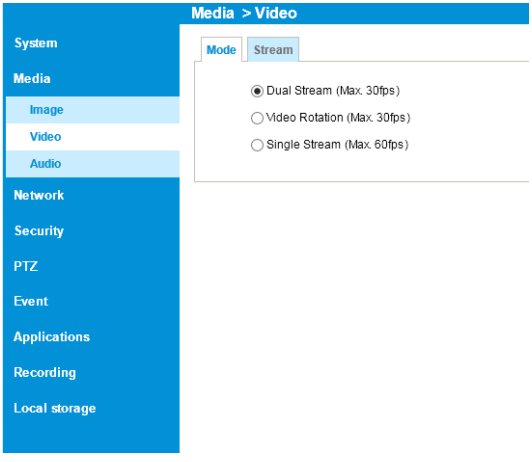

Make sure that external IR is turned on in the night mode, and that the IR cut filter option is synchronized with the digital input you connected.

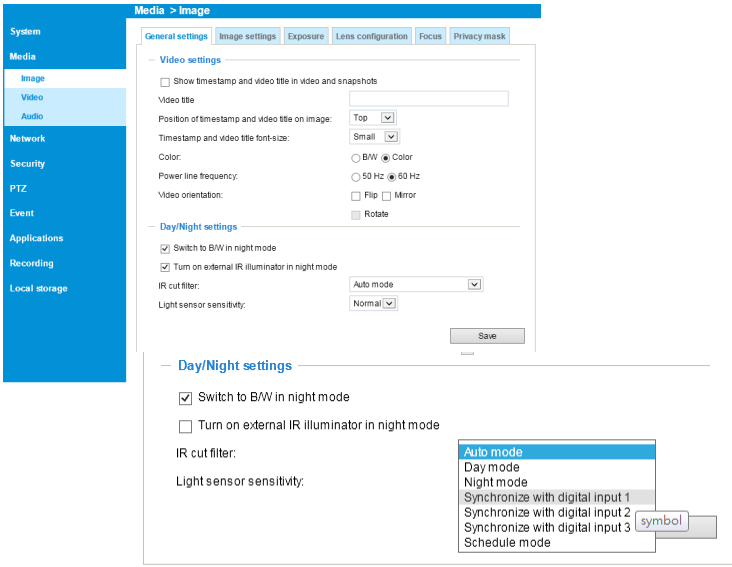

In the night mode, check if the input signals are correctly detected. You may simulate the night mode by blocking the IR unit's light sensor. Change the triggering parameters when necessary.

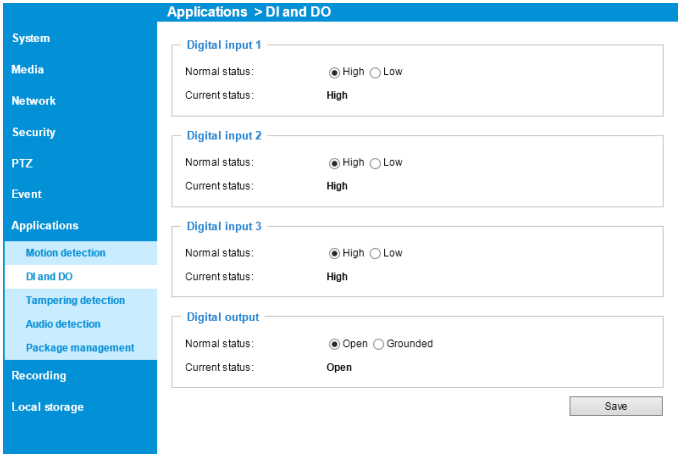

VI Appendix: RS485 Commands

For housings that come with IR illuminators, wiper, and washer, commands can be delivered via the RS485 protocol. The RS485 connection uses the Pelco D protocol.

Configuration parameters:

Baud rate	2400
Data bits	8
Parity	None
Stop bit	1

Command format:

Byte1	Byte2	Byte3	Byte4	Byte5	Byte6	Byte7
Sync	Addr	CMND1	CMND2	DATA1	DATA2	CKSM

Addr range: 0x00 ~ 0xFE. CKSM: check sum is the last 8 bits of the sum of Byte2 through Byte6.

Command Group 1:

Command Description	Command (hexadecimal, "ox" is ommited)	Note
VaIR Lens Stop	FF 01 00 00 00 01	Pelco D - Zoom Stop
VAIR Lens Wide	FF 01 00 40 00 00 41	Pelco D - Zoom Wide
VaIR Lens Tele	FF 01 00 20 00 00 21	Pelco D - Zoom Tele
Wiper On	FF 01 00 09 00 01 0B	Pelco D – Aux 1 On
Wiper Off	FF 01 00 0B 00 01 0D	Pelco D – Aux 1 Off
Wiper and Washer On	FF 01 00 09 00 02 0C	Pelco D – Aux 2 On
Wiper and Washer Off	FF 01 00 0B 00 02 0E	Pelco D – Aux 2 Off
IR Led Force On	FF 01 00 09 00 03 0D	Pelco D – Aux 3 On
IR Led Force Off	FF 01 00 0B 00 03 0F	Pelco D – Aux 3 Off

Command Group 2:

Command Name	Command (hexadecimal, ox is ommited)	Note
Addr configuration	FF 01 00 18 01 dd CKSM	dd: 0x00 ~ 0xFE; for example, when addr is 2, the command looks like FF 01 00 18 01 02 1C
IRMode	FF 01 00 18 02 mm CKSM	mm: IR mode mm=0x02: Light Sensor Auto (Default) mm=0x03: DI Trigger mm=0x04: via RS485 Command (When receiving IR Led Force On / IR Led Force Off command, will switch to using the IR Mode -RS485 Command)

		For example, IRmode_Auto FF 01 00 18 02 02 1D IRmode_DI FF 01 00 18 02 03 1E IRmode_CMD FF 01 00 18 02 04 1F
LightSensorGate	FF 01 00 18 03 LL CKSM	When the IR Mode Light Sensor Auto, the Lux value to turn IR LED can be configured. LL: Lux, changes is made by every10Lux For example: LightSensorGate = 100 FF 01 00 18 03 0A 26 LightSensorGate = 200 FF 01 00 18 03 14 30

The parameters of IR illuminator can be controlled via the RS485 connection. You can enable the connection in **Configuration** > **PTZ** > **Mechanical** window. Select the defaults for the IR illuminator: Pelco D, baud rate - 2400, Data bits - 8, Stop bit - 1, Parity - none.

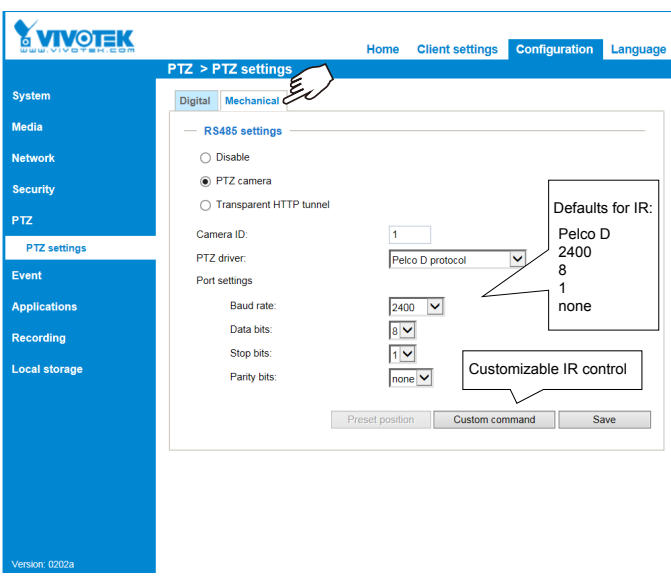

You can create custom command buttons by entering the Button name and the command itself:

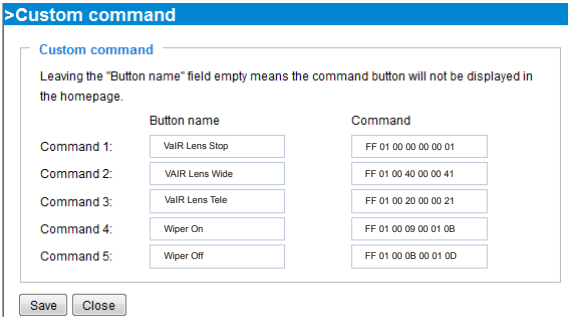

VaIR: The VAIR control include those on the IR Led and VaIR Lens.

There are 3 IR mode commands

IRMode = Light Sensor Auto (Default)

sensor lux reading < LightSensorGate - LED On

sensor lux reading >= (LightSensorGate + 10 Lux) - LED Off

IRMode = DI_1 Trigger (IR triggered on by DI

DI _1 shorted DI –(Low) - LED On

DI_1 open (High) - LED Off

IRMode = controlled by RS485 Command (Pelco D – Aux 3 On/Off)

IR Led Force On - LED On

IR Led Force Off - LED Off

DO_1 as IR Status Feedback

LED On, DO_1 is grounded via MOSFET (DI- connected)

LED Off, DO_1 no input

VaIR Lens Zoom control

Dip Switch

4 configurations using the Dip Switch on the distribution board.

When Lens stops, its last position will be memoried,and when powered on again, lens will move to the previous position. When powered on for the first time, Lens will follow the DIP switch configuration.

Wiper & Wahser control)
DI_2 Trigger:
When DI_2 connected to DI- (Low), wiper and washer operate for 3 times and then stop.

Using RS485 Command –Wiper Only (Pelco D – Aux 1 On/Off)
Wiper On, wiper takes action
Wiper Off, wiper starts one operation and then stops.

RS485 Command –Wiper & Washer (Pelco D – Aux2 On/Off)
Wiper and Washer On, pumps and spray water with wiper action.
Wiper and Washer Off, spraying and wiping starts one operation and then stops.

DO2 used for spraying control

DO_2 connected to DI- via MOSFET - starts spraying.

Spraying stops, and the LED turns Off when DO_2 is not triggered.

This page is intentionally left blank.