VIVOTEK Mounting Accessories

AM-717 Junction Box

Installation Guide

Revison History:

Rev. 1.0: Initial release

Part no.: 625032600G
Accessory Ordering part no.: AM-717: 900029900G

I Compatible VIVOTEK Cameras & Enclosures

Compatible cameras/brackets
IP8355H,IP8355EH,IP8365H,IP8365EH,IP8371,IP8371E,IB8373-EH,IP8372,IB8381,IB8381-E
AE-236, AE-237, AE-241, AE-242

Max. load	AM-717: 10KG	Dimensions	AM-717: 168 x 134 x 99.5mm
Weight	AM-717: 1.276KG		

AM-717 Dimensions

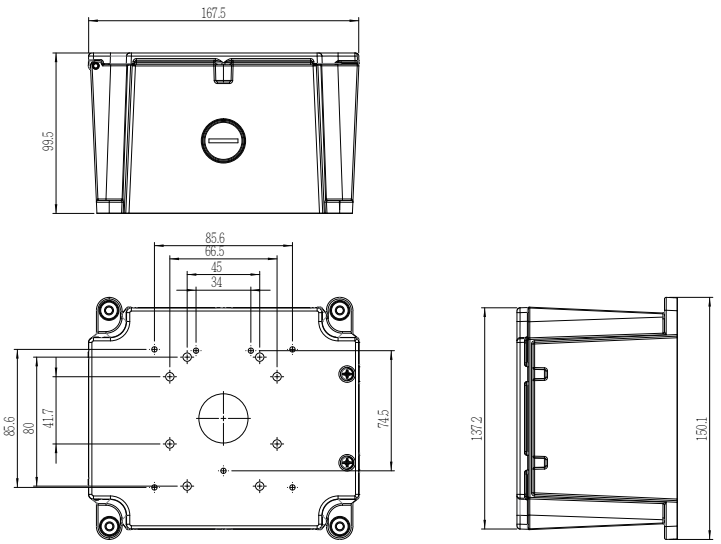

Screws

for securing box to wall	P4*L25.3 galvanized steel; anchors ø8*ø3.2*L25	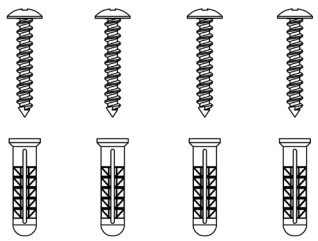
for AE-236, 237, 241, 242	Hex Phillips 1/4W20*L9.5 galvanized steel	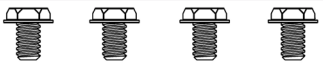
For bullet cameras	Round head, M4*0.7*L10 galvanized steel	
For securing to AM-313	Pan head, M4*7*L20 galvanized steel	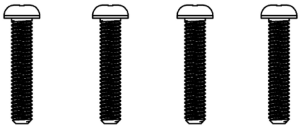

AM-717 Mounting Holes

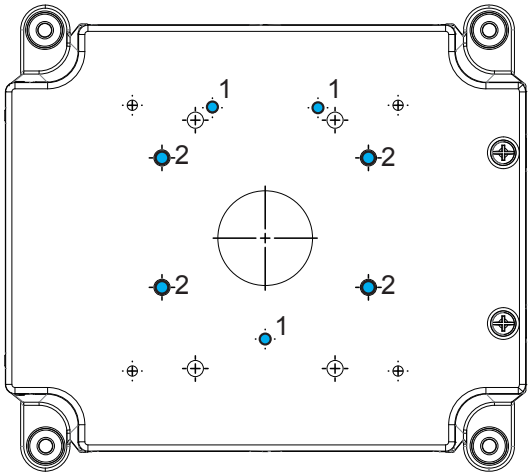

Hole #	Applicable camera / Accessories	Picture
#1	IP8355H, IP8355EH, IP8365H, IP8365EH, IP8371, IP8371E, IB8373-EH, IP8372, IB8381, IB8381-E	
#2	AE-236, AE-237, AE-241, AE-242	

Example: AE-242 + AM-717

Example: AE-242 + AM-717 + AM-313

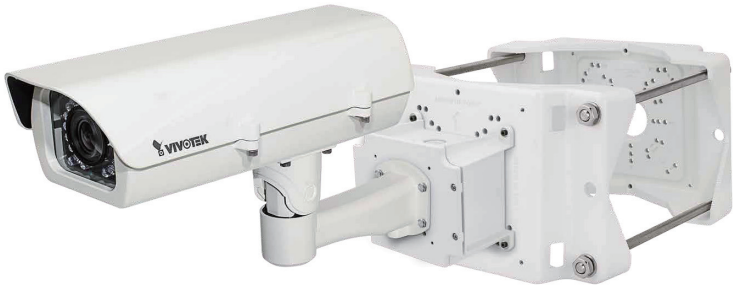

Use the M20 corrugated conduit fittings for routing cables with waterproof protection.

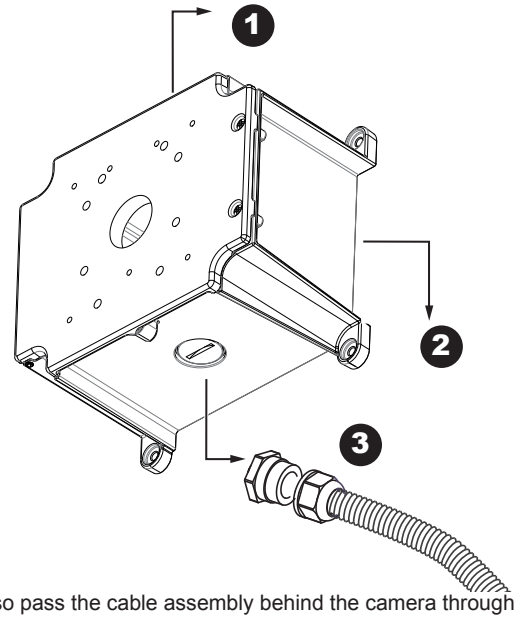
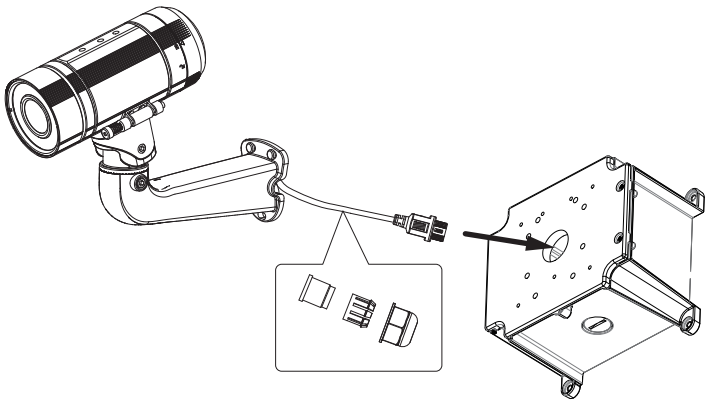
Also pass the cable assembly behind the camera through the cable gland in the center of the box.